# Appendix 20 – Optional Subscribers Offerings

## Analog Vehicular Repeater System (VRS)

As an optional subscriber package, Motorola will provide the Commonwealth an Analog Vehicular Repeater System (VRS). This package will be comprised of the following:

- VHF/700/800 MHz Cross-Band Mobexcom Analog VRS
- 700/800 MHz mobile antenna
- Vehicular Portable Radio Charger for XTS 2500
- Mobile radio will be a XTL 2500

Detailed technical specifications for the Mobexcom Analog VRS are included in Appendix 5.

Prior to any Analog VRS installation, Motorola will coordinate installation details in the same manner as described for the Digital VRS (DVRS) installation procedures in the System Integration Statement of Work in Section 1.

### Principle of Operation

The VRS provides local radio coverage extension capability between a portable radio and a base station. It allows portable users to communicate with the rest of the radio network while outside of the main coverage area.

The Vehicular Repeater System (VRS) consists of a Mobexcom 800MHz Vehicular Repeater and a Motorola XTL 5000 Mobile Radio. Both devices are controlled using the common Control Head (see Fig. 20A-1).

The Mobexcom Vehicular Repeater System is designed to operate cross band. The Mobexcom is unique in that it directly interfaces to the XTL 5000 mobile radio and supports advanced system features such as portable emergency, trunking tones and remote mode switching.

The Mobexcom uses a high power (10 W), continuous duty rated, full duplex, software driven vehicular repeater. It employs a sophisticated busy lockout algorithm preventing simulcast transmissions when more than one VRS are trying to transmit from the same location at the same time.

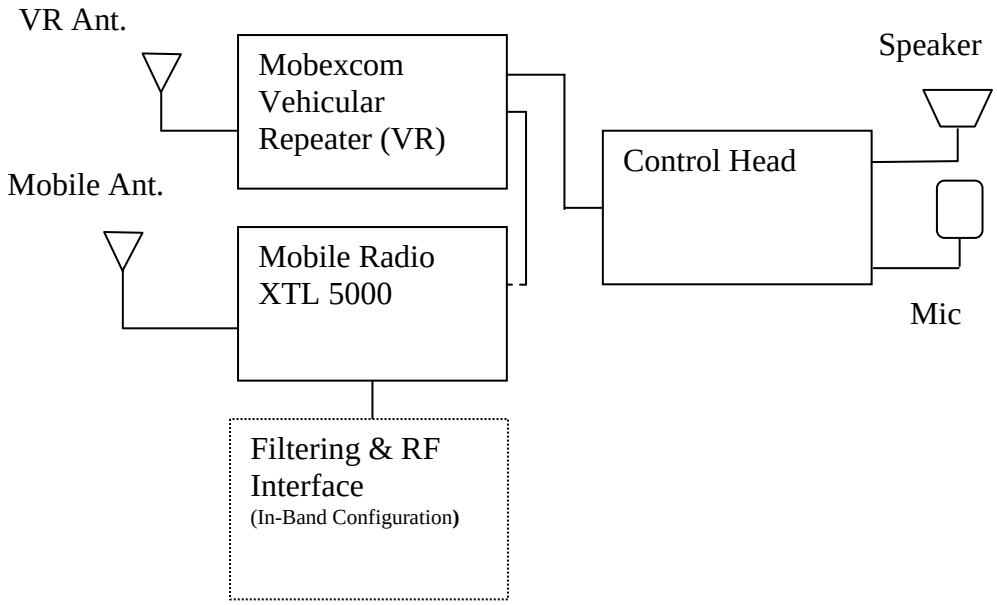


Fig. 20A-1 Vehicular Repeater System (VRS) Simplified Block Diagram.

**Modes of Operation**

The VRS can operate in three different modes – Mobile, Local and System repeat.

**Mobile Mode**

This mode is used when VRS operation is not required. The VRS operates as a standard conventional or trunking mobile radio as if the VR were not present.

**Local Repeat Mode**

The Local mode permits communications between portable radio users and the VRS mobile radio operator by using a VR channel, without interfering with the system channels. This mode may be used by tactical units operating in isolation from the network due to either lack of network coverage or for operational reasons.

When a number of enabled repeaters are within reception range of one another, the VR busy lockout function prevents the simultaneous transmissions from multiple repeaters. As a programmable feature, portable users can hear system traffic.

**System Repeat Mode**

The System mode is used when full communications among all radio parties are desired. In this mode both the Mobile Radio and the Mobexcom VR are enabled to permit communications among nearby portable users, the VRS mobile radio user and the rest of the conventional or trunking system users and operators.

## Trunking Systems - VRS Features

### System Tones in System or Local Mode

The trunking access or deny tones are emulated from the VR, thereby providing a positive acknowledgement to the portable operator. The portable operator accesses the network by pressing and holding the PTT button and then monitoring for the usual trunking acknowledgement tones.

When the portable PTT is released, the VR generates “go ahead” or “deny” (system busy) tones, regardless of the duration the PTT was held, in order to indicate to the portable user that the transmission was or was not successful.

If the repeated message was cut short (due to the mobile time out timer being exceeded for instance), a lower pitched “deny” is sent to the portables.

If the portable user does not hear a tone after completing a transmission, the portable is out of range of the active repeater.

As a programmable option per mode of operation, system tones at the beginning and / or at the end of transmission may be disabled.
Pressing the ST button on the control head may also disable system tones at the beginning and end of transmission. The tones resume after power up.

### Dispatcher Control and Monitoring

When the mobile user selects the desired repeater mode or when the portable user selects the repeater System mode, the VRS sends operating mode change information to the dispatcher using standard status messages.

The above allows suitably equipped dispatchers to monitor the VRS modes.

The dispatcher can change the VR mode of operation to a specific mobile by sending a “Call Alert”. He/She can toggle between the three repeater modes by repetitive sending of a “Call Alert” and will receive a status message back with acknowledgement from the VRS every time.

### Group Calls

- Portable initiates a Group Call

  Regular portable, VR in System Mode
  If the user presses PTT continuously, he / she will not receive channel assignment acknowledgement. If he / she starts talking, the message may not be fully received by the system .The portable user should press and release the

PTT button within 1 sec, then wait for a system acknowledgement tone, PTT again and start talking.

In both cases (special or regular portable), if Trailing Tones are enabled by the VR software, the portable user will receive either “go ahead” or “deny” tones at the end of the conversation i.e. when the PTT is released.

Regular Portable, In VR Local mode – system tones can be programmed to be transmitted in Local mode i.e. the same scenario, as described above, will apply.

- Mobile user initiates a Group Call

  Mobile Mode – no changes to normal Mobile radio operation
  System or Local Mode – no changes to normal Mobile Radio operation (except for Busy Lockout situation, which is described separately in the Busy Lockout paragraph)

**Private Calls**

Private call from the portable is not supported. Private calls are supported by the mobile radio only (if this feature is enabled by the mobile radio programming software). The VR will be disabled for the duration of the Private Call except for the Emergency Call, which has higher priority over Private Call.

**Emergency Calls**

Emergency call initiated by the Mobile – no changes to the normal emergency call handling as described in the Mobile Radio manual.

- **Emergency Call initiated by the portable user**

  Upon receipt of an EMERG message from a portable, the VRs that hear the EMERG will react as follows, regardless of which mode they are currently in. All VRs that have received the EMERG automatically switch to SYStem mode without sending mode changing tones to the portables and /or dispatcher.

  All VRs that received the EMERG automatically execute the standard VR contention (Busy Lockout) algorithm check to determine which of the units will be the Master and will be sending the EMERG message to the network.

  Any VRs, which received the EMERG but were not elected to be the Master will detect this fact and revert to the mode of operation they were in prior to having received the EMERG message. Those VRs that revert to LOCal or SYStem mode will contend on future portable voice or EMERG transmissions. The elected Master will ignore any new EMERG messages

from a portable until the first EMERG alarm is acknowledged.

The Master VR will cause the Mobile Radio to enter EMERG mode, send an EMERG message to the network and await network ACKnowledgement.

The trunked network's response with an ACK to the trunked mobile EMERG or the time-out-timer expiry will take the mobile out of the EMERG mode, upon which the VR will send a signaling message to the portable and enable its normal operation.

If the Emergency Ack Tone Enable is enabled, the Master VR will send an audible "boop" in the case of time out timer expiry to the portable operator.

If the portable fails to receive an ACK from the VR, it will keep transmitting the Emergency a pre-programmed (in the portable) number of times.

If the VR counter expires, the Busy Lockout function (if enabled in the VR) will be disabled and all VRs that had received the EMERG will transmit it to the system if the portable keeps transmitting the EMERG.

The EMERG is cleared only after a VR sends an ACK to the portable that generated the Emergency or the pre-programmed counter in the portable expires.

If the VR does not receive any more EMERG for a pre-programmed time, its EMERG handling algorithm will be reset.

When the Master VR detects that the EMERG process has been completed and there is no portable transmission in progress, it will cause the trunked mobile to send a mode change message over the network to ensure that the correct mode (SYStem) is indicated at dispatch.

**Busy Lockout**

The Busy Lockout feature prevents more than one VR to transmit on the same channels, at the same time in the same area. Busy Lockout can be Enabled or Disabled by the VR programming software. The Busy Lockout Algorithm is such that there is always a Master VR assigned when a message is to be repeated.

The algorithm does not guarantee that the VR closest to the transmitting portable will be the one repeating the message.

When a mobile user is initiating a call and presses the PTT, he / she may not be able to key up the VR due to the VR being busied out. If the VR is busied out, the control head display will not show a "T" but will continue to show "S" if in the System mode, or "L" if in the Local mode. In addition, when in Local mode, the mobile user will hear either a "go ahead" or "deny" tones depending on the VR being available or busied out

respectively. In System mode, the only system tones the mobile user will be able to hear will be from the trunking system, not from the VR.

### Remote Switching of VR Mode of Operation

The portable user can remotely (via DTMF tones) switch the VR from Mobile or Local to System Mode (not the other way around). To be able to execute the remote mode switching feature, the portable and VR need to have the same DTMF sequence programmed.

## XTS 1500 Digital VHF Portable Radio

The XTS 1500 Digital VHF portable radio is targeted for a mid to late 2004 release. The XTS 1500 will provide a low-tier digital and APCO 25 solution for Non-Public Safety users. The design will include the use of the latest M-Core technology. This technology has the advantage of faster processing and increased memory. The radio will provide a full VHF band split (136-174 MHz) in the same radio. Due to the fact that the radio is still under design, the specifications have not been solidified; however, Motorola's stance on the XTS 1500 electrical and mechanical specifications is that this portable will at least meet those of the XTS 2500 VHF radios.

### XTS 1500 Design/Technical Highlights:

- Low Tier APCO 25 solution for Non-Public Safety Users
- Designed based on XTS 2500 dimension
- Reuse of many of the XTS 2500 Accessories
- Electrical & Mechanical Specification to meet those of the XTS 2500
- Developed with the latest M-Core Chipset Technology Available for Two-Way Mobile Radios
- Design is optimized for high performance & increased processing speed
- Increased memory capacity
- User Friendly Windows based Customer Programming Software (CPS); same CPS used for XTS 5000 and XTS 2500
- Full VHF Band Split (136-174 MHz) in one radio

## Video Enforcer

**Mobile Video Enforcer**

The Mobile Video Enforcer digitally captures and manages incidents featuring an integrated solution for the in-vehicle capture and in-office management of the collected information. The Mobile Video Enforcer consists of a Mobile Digital Video Recorder (MDVR) placed in the public safety vehicle and a Digital Video Management Solution (DVMS) placed in the office. High quality video and audio evidence is reliably collected in the harsh environment of daily patrol through officer-friendly interfaces. A "smart" in-car video system automates day-to-day operation and distinguishes priority recordings.

**Mobile Digital Video Recorder (MDVR-100)**

- Compact device proven to operate under the rigors of public safety use
- Full-motion (30 fps), standards-based, MPEG-2 video – the same quality used in DVDs
- Automatic, event-triggered recording based on lights, sirens, microphone and other inputs
- Tamper-proof evidence collection with embedded situation information
- Store up to a month of video and audio, depending on usage, before downloading
- Pre-event recording captures what occurred before the video activates – running red lights, crossing medians to establish probable cause, speeding violations
- Automatic Quick Zoom camera capabilities obtain vital information without officer intervention
- Integrated LCD display and controls, multiple camera support, and multiple audio support
- Interfaces with Motorola's current ruggedized computers (MW 800, ML 900)

**Digital Video Management Solution (DVMS)**

- Automatic uploading, archiving and management of captured video

• Classification system defined by agency to catalog each video clip
• Racial profiling fields, defined by agency, capture mandated information where required
• File and Retention Management system integrated with classification system to ensure policy compliance
• Any activity logged with each incident video, including playback
• Networked access to stored video information
• Automatic software updates to MDVRs
• Ability to output still pictures and video clips in standard format for training or evidentiary purposes
• Search and sort videos by officer, classification fields and other methods

## Transit Pak Description

As an optional subscriber package, Motorola will provide the Commonwealth self-contained transportable cases containing an integrated vehicular radio system called the "Transit Pak." Each Transit Pak will be comprised of the following subscriber equipment:

- **VHF XTL 5000 Model W9 mobile radio** – equipped with the following:
  - AES encryption
  - Over-the-Air Rekeying (OTAR) options
  - Magnetic-mount VHF mobile antenna
  - The other XTL 5000 features/options described in Section 10 (Subscribers)

- **VHF/700/800 MHz Cross-Band Digital Vehicular Repeater System (DVRS)** – equipped with the following:
  - Magnetic-mount 700/800 MHz mobile antenna
  - Vehicular Portable Radio Charger for the XTS 5000 portable radio (below)
  - The other DVRS features/options described in Section 10 (Subscribers)

- **700/800 MHz XTS 5000 Model III portable radio** -- equipped with the following:
  - AES encryption
  - Over-the-Air Rekeying (OTAR)
  - Portable radio accessories (spare battery, AC-powered single-unit charger, carry case, user manual, programming kit)
  - The other XTS 5000 features/options described in Section 10 (Subscribers)

Motorola will integrate the above equipment into two carrying cases, enabling single-person conveyance and adding flexibility for installation in a variety of vehicle configurations. The carrying cases will be constructed from high-impact materials and will include the required interconnecting cables, insulation, shock-absorbing materials,

and a 12/24 VDC power converter. Also, a power-interface cable will be provided. Any additional connectivity requirements for the various Commonwealth vehicles' power sources will be determined during the design review process.